SOLID POLAR

0,36

U_d VALUE
(W/m² * K)

210 kg
MAXIMUM LOAD

PROTECTIVE FEET

x2
SEAL

HANDRAIL

ADDITIONAL STEP

5
YEARS GUARANTEE

86 mm
HATCH THICKNESS

4 CLASS AIR TIGHT NESS

PEFC
PEFC/32-32-464
By sourcing PEFC, we are supporting sustainably managed forests globally
www.pefc.pl

EN 14975
COMPLIANCE WITH THE STANDARD

OMAN®

SOLID POLAR

The **SOLID POLAR** staircase has a double sealing and an 86 mm thick hatch, thanks to which it performs excellently in all conditions, at the same time contributing to a significant reduction in costs connected with heating your house or flat. **POLAR** stairs are characterised by the best heat transfer coefficient on the market of U=0.36 and the highest tightness class 4. Due to its excellent parameters, **POLAR** stairs are ideal for installation in places where there are large temperature differences. Choosing **POLAR** stairs is an investment which allows to reduce the loss of heated air, improve the level of thermal insulation and significantly reduce heating costs. Thanks to the use of a robust metal ladder of the **SOLID** type, the maximum load during use of the stairs is as high as 210 kg. **SOLID POLAR** stairs are equipped with anti-slip feet which perfectly adhere to the floor, prevent scratching the floor surface, and constitute an aesthetic finishing of the ladder after it has been cut. **SOLID POLAR** stairs are equipped with a stable and durable handrail for increased safety and comfort of use. With the user's comfort in mind, the handrail has been designed so that it can be installed on the left or right side, depending on the customer's preference. The excellent quality of the materials used in the production of the stairs and the attention to every detail of the finish mean that the stairs will satisfy even the most demanding customers. By choosing the best insulated loft ladder on the market, you are reducing the costs associated with heating and thus making a real contribution to the fight for a better climate.

Technical specification

INSULATED HATCH THICKNESS	**86 mm**
THICKNESS OF THERMAL INSULATION	**80 mm**
HATCH COLOUR FROM BOTH SIDES	**white**
METAL LADDER	**3 sections**
HEIGHT OF WOODEN BOX	**170 mm**
WIDTH OF LADDER	**400 mm**
WIDTH OF STEP	**361 mm**
DEPTH OF STEP	**80 mm**
MAXIMAL LANDING SPACE	**147 cm**
OPENING DISTANCE	**169 cm**
MAXIMUM CEILING HEIGHT	**280 cm**

Technical drawing

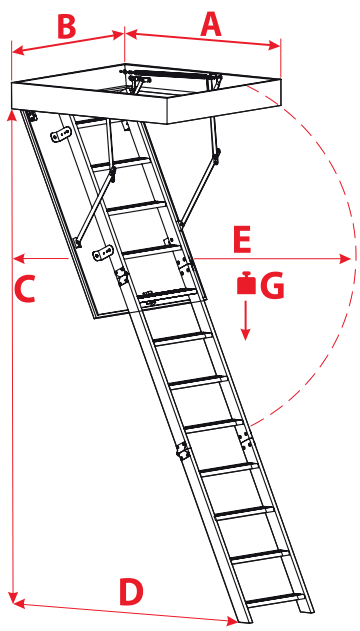

	A > 113		A = 113
C	280 cm	C	280 cm
D	147 cm	D	139 cm
E	169 cm	E	165 cm
G	210 kg	G	210 kg

Box dimensions [cm] A x B

Outer box dimensions, mounting opening 2 cm longer.

113 x 55*	**120 x 55***	**130 x 55***	**140 x 55***
113 x 60	**120 x 60**	**130 x 60**	**140 x 60**
113 x 70	**120 x 70**	**130 x 70**	**140 x 70**

*Brak możliwości montażu poręczy

Non-standard dimensions

Min - Max Length	**(113) 120 - 140 cm**
Min - Max Width	**54 - 80 cm**

*Unusual dimensions available in full size of untypical stairs can not exceed 1 m^2.

Accesories

MASKING BATTEN

MOUNTING SYSTEM

HATCH BALUSTRADE